كلية الهندسة بشبرا

FACULTY OF ENGINEERING AT SHOUBRA

Electronics

Fastest Finger First Game using 555 timer

Name : Nada Ashraf Abd El-Mohsen

Sec : 3

Dr. Maher Abd El-Rasoul

2025

1. Introduction

The Fastest Finger Game circuit is designed to detect the first player to press a button. It is commonly used in quizzes and competition settings where quick response is critical. In this project, two players compete, and the first to press their button activates a corresponding LED while disabling the other player's input to fairly determine the winner. The circuit is built using simple electronic components and two 555 Timer ICs configured in **monostable mode**.

2. Circuit Diagram

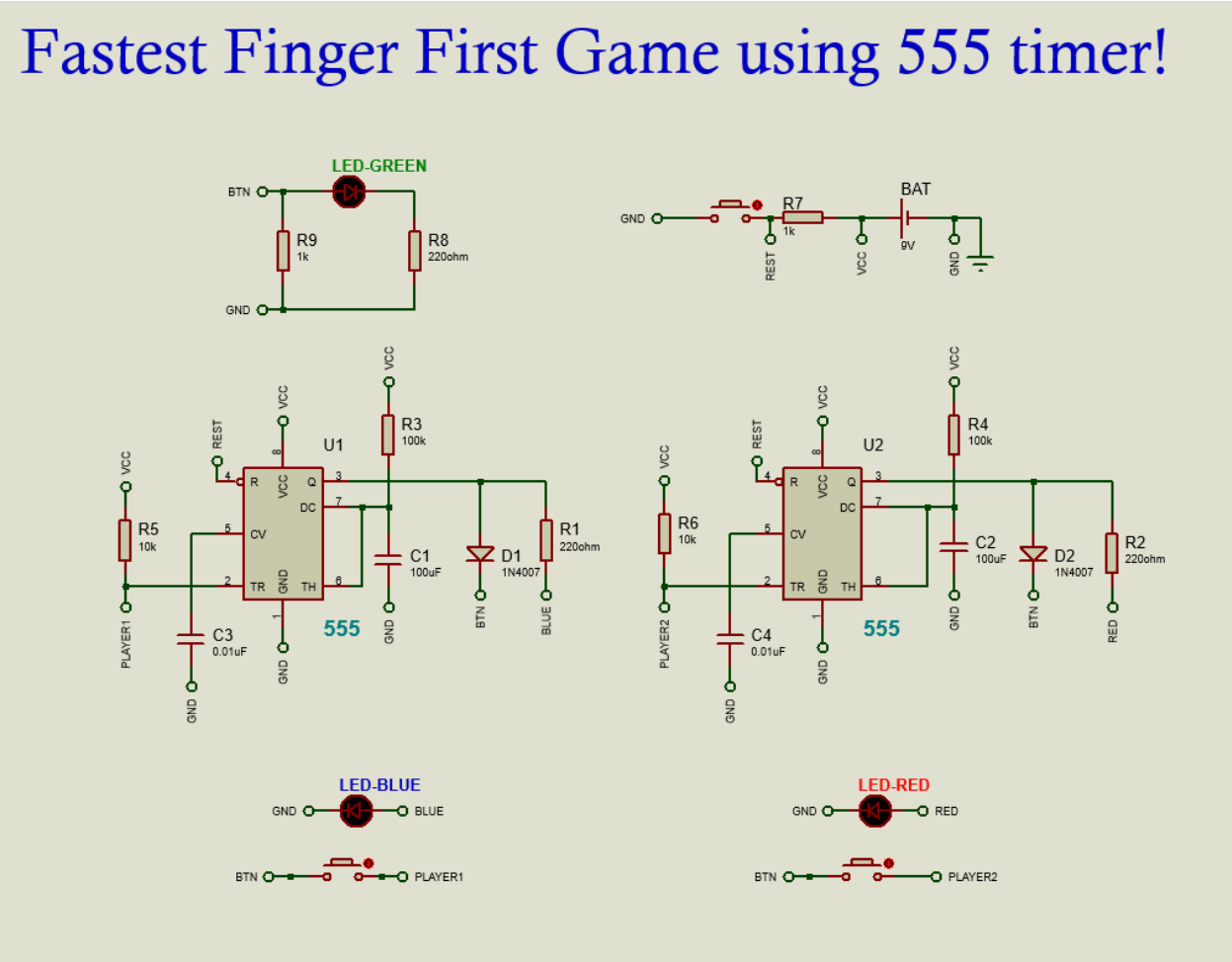

3. Working Mechanism

- **Initial State**:
  Both LEDs are OFF. The circuit waits for one of the players to press their button.
- **Button Press**:
  When a player presses their button, it sends a LOW pulse to the **trigger pin (Pin 2)** of their corresponding **555 timer**.
- **555 Timer Monostable Mode**:
  - Each 555 Timer is configured as a **monostable multivibrator**.
  - Once triggered, the timer output (Pin 3) goes **HIGH** for a set period (determined by the external resistor and capacitor).
  - During this time, the corresponding LED lights up.
  - After the timer finishes the cycle, it resets automatically.
- **First Trigger Wins**:
  - Once a timer is triggered, its output is HIGH, and at the same time, the circuit logic is designed to **disable the second player's trigger**.
  - This prevents the second button from activating after the first, ensuring a fair game (only the first press is recognized).
- **Reset**:
  - After a period (example: 10 seconds), the circuit resets automatically, ready for the next round.

4- Small Note about Timing Calculation:

The output pulse width for a 555 timer in monostable mode is calculated as:

$$\mathrm{T} = 1.1 \times R \times C$$

where:

- **T** = time in seconds
- **R** = resistance in ohms (100KΩ)
- **C** = capacitance in farads (100uF)

You can adjust **R** and **C** values based on how long you want the winning LED to stay ON.

5- Components

Component	Value	Name in Proteus
555 Timer IC (Player 1)	NE555	U1
555 Timer IC (Player 2)	NE555	U2
Push Button (Player 1)	Normally Open (NO)	SW1
Push Button (Player 2)	Normally Open (NO)	SW2
LED (Player 1)	Blue LED	LED-BLUE
LED (Player 2)	Red LED	LED-RED
LED (Reset)	Green LED	LED-Green
Current-Limiting Resistor (Player 1 LED)	220Ω	R1
Current-Limiting Resistor (Player 2 LED)	220Ω	R2
Timing Resistor (Player 1)	100kΩ	R3
Timing Resistor (Player 2)	100kΩ	R4
Timing Capacitor (Player 1)	100µF	C1
Timing Capacitor (Player 2)	100µF	C2
Pull-Down Resistor (Player 1 Button)	10kΩ	R5
Pull-Down Resistor (Player 2 Button)	10kΩ	R6
Filter Capacitor (for Power)	0.1µF	C3
Filter Capacitor (for Power)	0.1µF	C4
Protection Diode (Player 1)	1N4007	D1
Protection Diode (Player 2)	1N4007	D2
Pull-up resistor	1kΩ	R9
Current-limiting resistor	220Ω	R8
Pull-down resistor	1kΩ	R7
Power Supply	9V DC	VCC

6- Components and Their Explanations:

1. 555 Timer IC (U1 and U2)

- **Role**: Two 555 timers are used in **monostable mode**.
- **Function**: In monostable mode, the 555 produces a single pulse of a defined duration when triggered. In this circuit, each player's button press triggers their timer, creating a time window where their action is recognized.

2. R1 & R3 (Player 1 Timing & LED Resistor)

- **R3 (100 kΩ)**
  - **Role**: Works with C1 in the monostable network of U1 (the first 555 timer).
  - **Function**: Sets the pulse-width TTT of the output high period when Player 1 presses SW1 . Choosing 10 kΩ gives a visible LED on-time (e.g. ~1 s with a 100 µF cap).
- **R1 (220 Ω)**
  - **Role**: Series resistor for LED1.
  - **Function**: Limits current through the red LED (LED1) to roughly 10–20 mA, protecting it and the 555's output from overcurrent.

3. R2 & R4 (Player 2 Timing & LED Resistor)

- **R4 (100 kΩ)**
  - **Role**: Paired with C2 on U2's monostable side.
  - **Function**: Determines how long LED2 stays lit when Player 2 presses SW2.
- **R2 (220 Ω)**
  - **Role**: Series resistor for LED2.
  - **Function**: Controls current through the green LED (LED2), ensuring safe brightness and protecting both the LED and the timer output.

4. R5 & R6 (Button Pull-Downs)

- **R5 (10 kΩ)**
  - **Role**: Pull-down on U1's trigger pin (Pin 2).
  - **Function**: Holds the trigger pin at 0 V when SW1 is open, preventing random "floating" triggers from noise or leakage.
- **R6 (10 kΩ)**
  - **Role**: Pull-down on U2's trigger pin (Pin 2).
  - **Function**: Same as R5, but for Player 2's switch, ensuring only a deliberate button press can trigger the second timer.

5. Resistor R7 (1kΩ)

- **Role**: Pull-up resistor for the reset button.
- **Function**: Ensures that the reset line remains HIGH (inactive) when the reset button is not pressed, preventing accidental resets.

6. Resistor R8 (220Ω)

- **Role**: Current-limiting resistor for the green LED.
- **Function**: Protects the green LED by limiting the current flow, ensuring safe operation and controlling brightness.

7. Resistor R9 (1kΩ)

- **Role**: Pull-down resistor for the push button.
- **Function**: Ensures the input pin reads LOW (0V) when the button is not pressed, avoiding false triggers.

8. Capacitors (C1, C2)

- **Role**: Timing capacitors for the 555 timers.
- **Function**: C1 and C2 work with R3-R4 to define the pulse width (time duration) of each 555 timer's output pulse.

9. Capacitors (C3, C4)

- **Role**: Bypass (decoupling) capacitors.
- **Function**: C3 and C4 are used to filter noise and stabilize the power supply voltage for the ICs, ensuring smooth operation.

10. Diodes (D1, D2)

- **Role**: Protection diodes.
- **Function**:
    - D1 and D2 protect the circuit from **reverse current** and **voltage spikes** that could damage the **555 timers** or **LEDs**. They ensure **reliable operation** by blocking harmful currents when buttons are pressed or when there are power fluctuations, keeping the game functioning smoothly.
    - **Protect** against reverse currents and voltage spikes that could damage the 555 timers or LEDs.
    - **Isolate** each player's trigger path, so once one 555 fires, the other is blocked—preventing the loser from activating their LED until the next reset.

11. LEDs (Player 1 LED, Player 2 LED, Green LED)

- **Role**: Visual indication.
- **Function**: LEDs indicate which player pressed their button first. The green LED confirms successful game reset or button action.

12. Push Buttons (Player 1, Player 2, Reset Button)

- **Role**: User input.
- **Function**: Players press their respective buttons to compete. The reset button restarts the circuit for a new round.
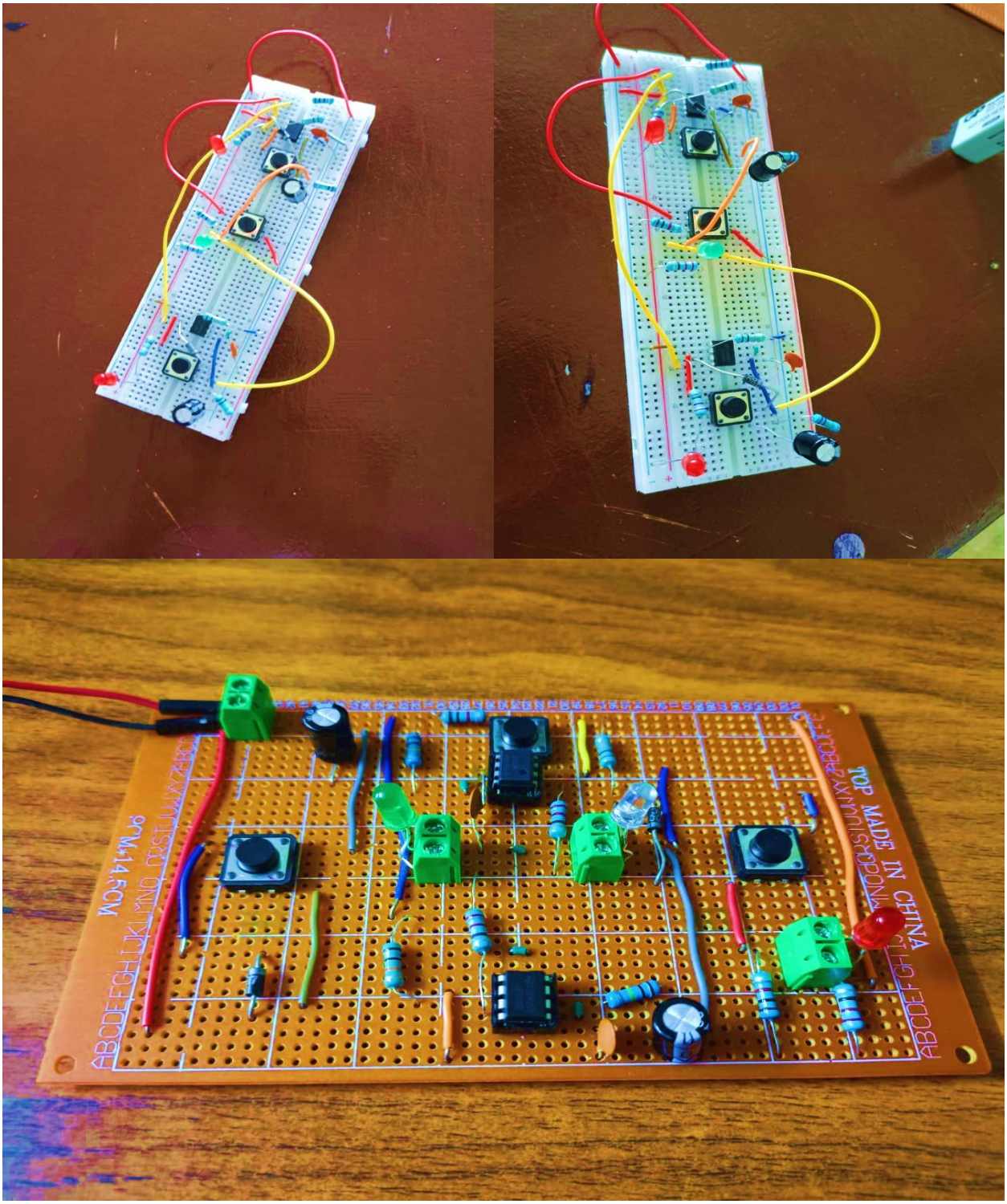
7. Hardware Components